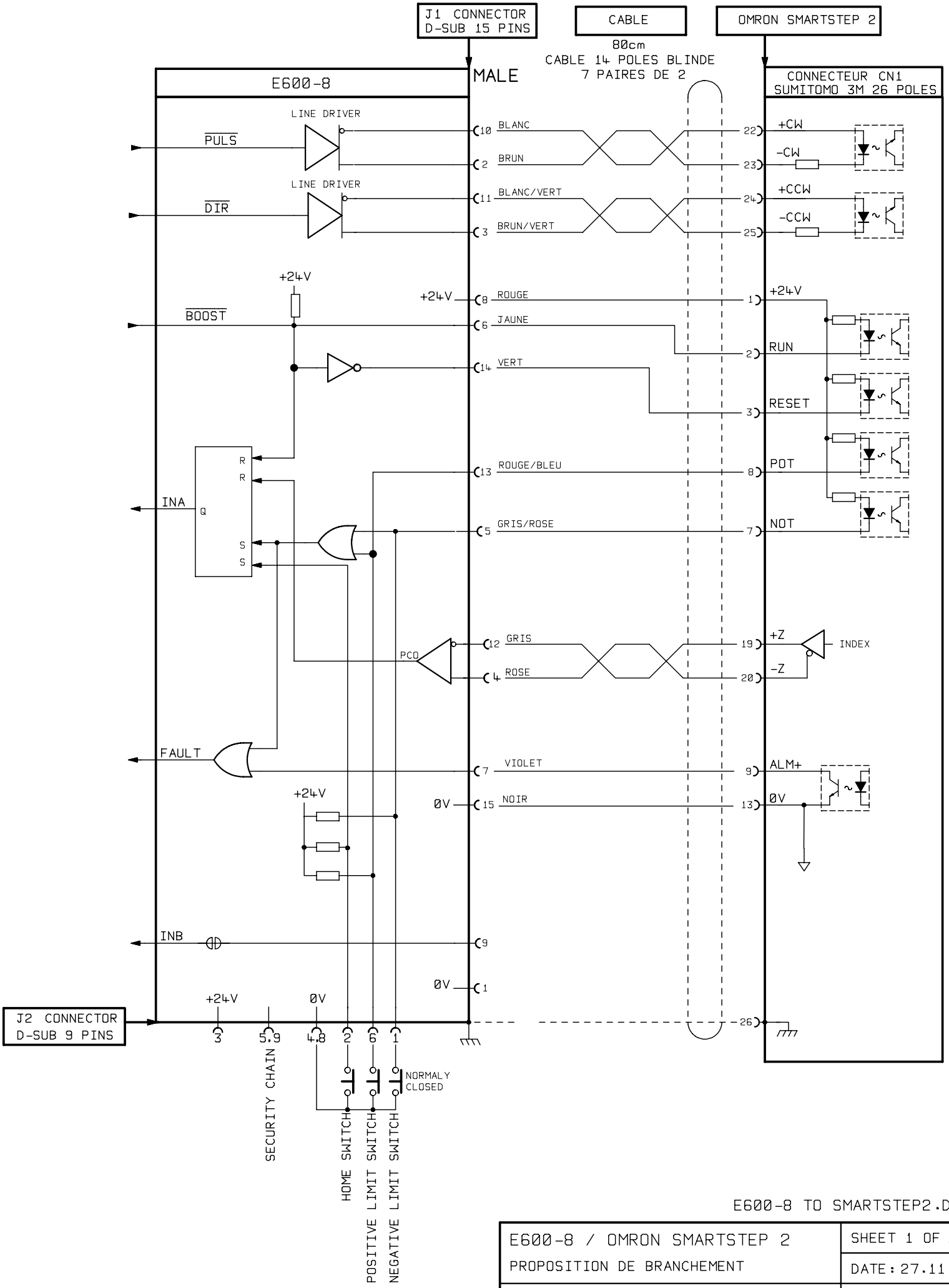

E600-8 TO SMARTSTEP2.DWG

E600-8 / OMRON SMARTSTEP 2	SHEET 1 OF 1
PROPOSITION DE BRANCHEMENT	DATE: 27.11.09
E.I.P SA CH-1667 ENNEY	